中国汽研



Professional Automotive Testing Equipment Manufacturer And System Solution Supplier

China Automotive Engineering Research Institute
Chongqing CAERI Automobile Test Equipment Development Co., L td

Professional Automotive Testing Equipment Manufacturer
And System Solution Supplier



COMPANY PROFILE

Chongqing CAERI Automobile Test Equipment Development Co.. Ltd is a wholly owned subsidiary of China Automotive Engineering Research Institute Co., Ltd (stock code 601965). It focus on research and development of test equipment for automobile, aviation, highspeed railway etc.fields. Since1993,it has supplied many test equipment to different customers globaly.Regarding to production scaleandmarketshare,it is the top one supplier of automobile test equipments in China.







Major domestic clients:

中国汽研 | 中国汽车技术研究中心 | XY | 中国一汽 | DFM | 广汽HONDA | 上汽集团 SAIC MOTOR | 长安汽车 | 北汽 | JAC 江淮汽车 | BYD | 长城汽车
Das Auto. | Ford | TOYOTA | 广汽集团 GAC GROUP | mazda | NISSAN | 中国重汽 SINOTRUK | 華菱汽車 | 陕汽重卡 | 大运 DAYUN | 四川现代
宇通客车 | 安凯客车 | 北汽集团 | 五菱汽车 | 北汽银翔 BAIC YINXIANG | 东风小康 | 力帆汽车 | 福田汽车 FOTON AUTO | 卡威汽车 KAIWEI AUTO | T-KING 唐骏汽车 | 三环汽车 TRI-RING
CHERY | 野马汽车 YEMA AUTO | CNJ 南骏汽车 | 五征集团 WUZHENG | 杭叉集团 | HELI 合力叉车 | GATC 广东汽车检测中心 | DEC 东方电气 | 三江航天 | BOSCH 博世 | HOERBIGER | TEKT 捷太格特
TRW | 东风德纳 | 方盛车桥 | Fuwa | 义和车桥 YIHE AXLES | 万安科技 | SORL 中国瑞立集团 RUILI GROUP CHINA | APG 亚太股份 | 精洲智达 | 豫北光洋 | 荆州恒隆 | 浙江万达

Major new energy clients:

JMEV 江铃集团新能源 | 金康新能源 | YUDO 云度 | 知豆 ZD | 南京金龙 | 中国中车 CRRC | 长江·EV | 合众汽车 | 沃特玛 OptimumNano | 奥新新能源 AOXIN NEW ENERGY | 时风集团 SHIFENG GROUP | 小鹏汽车
YOGOMO | 飞碟汽车 | Weltmeister | LEAPMOTOR | 绿驰 | 森源重工 | 国机汽车 | 广汽新能源 | 国金汽车

CONTENTS



01 WHOLE VEHICLE

- Light duty chassis dynamometer 01
- Heavy duty chassis dynamometer 02
- Light duty Four-Pole road simulator 02
- Automobile Side And Tail Protection Testing Device 03
- Static Rollover (3D gravity) 03
- Automatic Pilot System 04
- Cab Impact Test Stand Of Commercial Vehicle 04
- Heavy-duty Road Simulation Bench With Wheel Coupling 04
- Cab Static Strength Test Stand of Commercial Vehicle 05
- Body Strength Test Stand of Car 05
- Test Stand Automobile Side and Tail Protection Testing Device
- Bumper Impact Test Stand 06
- Strength and Local Stiffness Test Stand for Body in White 06
- Medium Chassis Dynamometer 07
- Pedestrian Impact Test Bed 07
- Automobile Auxiliary Frame Fatigue Test Bench 07

01-07



02 ENGINE AND POWERTRAIN

- Engine test system 08
- Comprehensive Test Stand of Powertrain 08

08-08



05 BRAKING SYSTEM

- Torsion Fatigue Test Stand of Braking System (Light) 21
- Braking System Test Stand (Heavy) 21
- Braking System Test Stand (Aviation) 22
- Inertia Simulation Test Stand Of Braking System (light、heavy、Engineering Machinery、aviation) 22
- Torsion Fatigue Test Stand of Braking System (Light, Heavy) 23
- Performance Test Stand of Pneumatic Braking Valve 23
- Durability Test Stand of Pneumatic Braking Valve 23
- Integral Performance Test Stand of Braking Clamp Assembly (hydraulics , pneumatic) 24
- Durability Test Stand of Hydraulic Braking Component 24
- Performance Test Stand of Vacuum Booster and Master Cylinder 24

21-24



06 NEW ENERGY

- Drive Motor Testing System 25
- Power Battery Testing System 25
- Powertrain Testing System for New Energy Automobile 25
- Optional accessories 27
- Turn-key Project Cases 28

25-28



03 TRANSMISSION SYSTEM

- Transmission System Test Stand 09
- Clutch Series Test Stand 09
- Synchronizer Test Stand (Light, Heavy) 10
- Series of Automatic Transmission Test Stand 10
- Mechanical Transmission Test Stand (Light、Heavy) 11
- Driving Axle Test Stand (Light, Heavy) 11
- Mechanical Close Type Test Stand (transmission Shaft 、drive Shaft) 12
- Bending Durability Test Stand of Axle Shell (Light, Heavy) 12
- Static Torque Test Stand 13
- Torsion Durability Test Stand 13
- High-low Temperature Durability Test Stand of Constantvelocity Universal Joint 13

09-13



04 STEERING & SUSPENSION SYSTEM

- 3 Axle Test Stand of Steering System 14
- Comprehensive Test Stand of Steering System 14
- 5 Axis Steering Test Bed 15
- Suspension System Test 15
- Steering Transmission System Test-bed Series 16
- EPS Test Stand Series 16
- Series Test Stand of Rack and Pinion Gear Steering System 17
- Series Test Stand of Recirculating Ball Steering Gear 18
- Automobile Ball Joint Test Stand Series 19
- Steering Pump Test Stand Series 20

14-20



07 INTELLIGENT CONNECTED VEHICLE TEST SYSTEM

- Intelligent Connected Vehicle Testing Equipment 29
- Physical and Virtual Simulation Testing Equipment for Automotive Electronic Control Components 29

29-29



08 OTHERS

- Multichannel Electro-hydraulic Servo Fatigue Testing Stand 30
- Safety Belt SeriesTest Stand 30
- Performance and Durability Test Stand of Shock Absorber 31
- Seat and Head Restraints Test Stand Series 31
- Child Seat Test Stand Series 31
- Tire Test Stand Series 32
- Automobile Pedal/Hand Brake Control Test Stand 32
- Integral Performance Test Stand Of Engine Water Pump 32
- Integral Performance Test Stand of Shifting System and Cable Assembly 33
- Performance and Reliability Test Stand of Engine Oil Pump 33
- Corporate Values 34
- Product Development Process 34

30-34

01 WHOLE VEHICLE

LIGHT DUTY CHASSIS DYNAMOMETER

Technical parameters of two-wheel-drive chassis dynamometer:

Inertia scope :	454 ~ 5000kg	**Drum diameter**:	1219.2 (48") ±0.254
Max axle load:	2000kg	**Drum surface**:	Hard alloy coating
Standard operating speed range:	0 ~ 200km/h	**Rated driving force (continuous)**:	5200N/7600N

Technical parameters of four-wheel-drive chassis dynamometer:

Inertia scope:	454～5000kg	**Drum diameter**:	1219.2（48"）±0.254
Max axle load (single axle):	2000kg	**Drum surface**:	Hard alloy coating
Standard operating speed range:	0～200km/h	**Rated wheel driving force(single axle)**:	5200N/7600N
Wheel base regulation range:	2000～4500mm	**Precision**:	1mm





It is mainly used for whole vehicle (two / four-wheel drive) performance tests, emission tests and durability tests. The vehicle simulates road driving on the drum.

Whole vehicle performance test

- Maximum speed
- Acceleration performance
- Minimum stable speed
- Coastdown test
- Climbing test
- Correction for speedometer and odometer
- Automotive dynamic bench test
- EPA Highway Fuel Economy Test
- Fuel consumption test

Emission test

- GB18352.1- 2001
- GB18352.2- 2001
- GB18352.3- 2005
- EPA75 test
- EPA SFTP (US06) test
- European EURO5 test
- US-city cycle and US-high speed cycle
- Japanese 10-15 simulation test
- Mileage and durability test

R&D

- Having the open road cycle editing function
- Having a variety of communication ways, and being able to communicate with automobile control module
- Having self-calibration function

HEAVY DUTY CHASSIS DYNAMOMETER

It is mainly used for whole vehicle performance tests, emission tests and durability tests. The vehicle driving wheels (with single or double drive shafts) simulate road driving on the drum of this equipment.

Technical parameters of chassis dynamometer:

Inertia scope : 3.5T ~ 49T
Drum diameter : 1828.8 (72") ±0.38
Max axle load : 30T
Drum surface : Hard alloy coating
Standard operating speed range : 0 ~ 160km/h
Rated driving force (continuous) :
40000N/60000N/80000N/120000N
Rear wheel drive : single drive shaft or dual drive shafts







Test purposes

- GB/T12545 fuel consumption test
- GB/T 12547 minimum stable speed test
- Automobile driving wheel output power test
- GB/T 12543 acceleration performance test
- GB/T 12544 maximum speed test
- GB/T 12536 Coastdown test
- Whole vehicle heat balance test the on drum
- GB/T 12539 simulated climbing test

LIGHT DUTY FOUR-POLE ROAD SIMULATOR

It is mainly used for road simulation tests for whole vehicles with total mass below 3500kg. The tire coupling method is used for loading, and it can simulate a variety of test fields for road load tests.





Main parameters

- maximum acceleration 21g
- Operating frequency : 0.1-70Hz ;

Main purposes

- Body and chassis structural durability test
- Ride comfort evaluation
- abnormal sound test

Test vehicle parameters

- Wheel track : 1200 ~ 1800mm
- wheel base : 1700 ~ 3500mm

AUTOMOBILE SIDE AND TAIL PROTECTION TESTING DEVICE





It is mainly used for performance tests for the side and tail protection devices of automobiles and trailers. The test stand is moveable as a whole, and operates easily and flexibly. The test stand is hydraulically loaded, and the pressure head is adjustable to suit different vehicle models.

Test items

- Static loading testing for the rear lower protection device of automobiles and trailers
- Static loading testing for the side lower protection device of automobiles and trailers

Technical Parameters:

Loading force : 0～10T (0~16T)

Loading head height: 350mm～750mm

Loading stroke : 0～450mm

STATIC ROLLOVER (3D GRAVITY) TEST STAND

It is mainly used for whole vehicle weighing tests, whole vehicle rollover tests and whole vehicle 3D gravity center measurement. The test stand measures the wheel load and the total weight of the vehicle with four independent floating plates, and tests the rollover stability of the vehicle by using a hydraulic cylinder to lift and turn the test stand so that the whole vehicle rolls over at a certain angle. With the quality reaction method, it can also measure the three-dimensional coordinates of the center of mass of the whole vehicle.







Technical Parameters:

Whole vehicle weighing : 0~5T/10T/20T/40T/80T **Rollover angle** : 0～50°

Stand length : 5m/6m/8m/10m/12m/16m/20mMaximum vehicle width : 2.5m/3.2m

Test items

- Motor vehicle maximum rollover stability angle test
- Motor vehicle wheel quality, axle quality, total mass and axle load rate test
- Motor vehicle center of mass position (3D coordinates) test
- Determining the normal load of the wheels on the support plane when the wheeled vehicle is tilted
- Extended research test on tilt-angle-related items such as suspension stiffness and directional forces

AUTOMATIC PILOT SYSTEM

The robot is mounted on the driver's seat, which can automatically control gears and three pedals, and perform tests according to the pre-set test procedures. It has a control system independent of the chassis dynamometer. The control program is preset with the test cycle specified in the test standard. Users can easily customize other test cycles on the programming platform.



CAB IMPACT TEST STAND OF COMMERCIAL VEHICLE

It is mainly used for strength tests for cab structure and connection pieces of commercial vehicles within the scope of technical parameters.



■ Test items

- ○ Front impact test of commercial vehicle cab
- ○ Double A-column impact test of commercial vehicle cab
- ○ Topside impact test of commercial vehicle cab

■ Technical Parameters:

- ○ Impact energy：Maximum customizable
- ○ Pendulum lifting angle：0～95°
- ○ Impact energy control mode：pendulum lifting angle
- ○ pendulum height adjustment stroke：2300mm（stepless adjustment）
- ○ Pendulum center of gravity, horizontal: (Y direction) adjustable：
- ○ Pendulum assembly: the pendulum and the swing arm, rigid structure and flexible swing arm (optional)

HEAVY-DUTY VEHICLE TIRE COUPLED ROAD SIMULATO







CAB STATIC STRENGTH TEST STAND OF COMMERCIAL VEHICLE

It is mainly used for commercial vehicle cab top hydrostatic test, commercial vehicle cab rear wall hydrostatic test, and quasi-static loading test of, for example, passenger car body topside.

Test items

- Electro-hydraulic servo closed-loop loading, with precise control
- The test stand has a four-column structure type, with structural stability
- Height and pitch angle automatically adjustable, automatic unlocking and locking, high degree of automation
- Multi-sensor force measurement platform, with good loading rigidity



Technical Parameters

- Loading force : 0 ~ 200000N
- Vertical loading stroke : 1000mm
- Horizontal / oblique loading stroke : 1200mm
- Loading rate : ≤13mm/s
- Loading time : ≤120s
- Loading board tilt angle adjustable



BODY STRENGTH TEST STAND OF CAR



It is mainly used for designing top and side door strength tests for cars with mass ≤ 4536kg.

Test items

- Electro-hydraulic servo closed-loop loading, precise control
- The test stand adopts a double-tilt column style, with stable structure and good accessibility. .
- The loading height, pitch angle, swing angle are continuously adjustable, indicating a wider range of applications
- The height, pitch angle, swing angle can be automatically adjusted; automatic unlocking and locking; high degree of automation; solving the problem of high-altitude automatic locking
- The three-axis force measuring platform is optional, with good loading rigidity





Technical Parameters

- Maximum loading force : maximum 250KN, customizable
- Maximum loading displacement : 650mm
- Pitch angle α : 0° ~ 90°
- Swing angle β : -20° ~ 20°
- loading rate : ≤13mm/s



BUMPER IMPACT TEST STAND

It is mainly used to perform front and rear bumper pendulum impact tests.

Test items

- longitudinal impact test
- vehicle corner crash test

Technical Parameters

Pendulum lifting angle: 0~45°

Impact speed: 1~16km/h

Impact energy control mode: pendulum lifting angle

Pendulum assembly: consisting of the pendulum and swing arm, with rigid structure

Swing arm: rigid, with a parallelogram mechanism

Impact height: 445mm (±100mm)

Pendulum height: adjustable



STRENGTH AND LOCAL STIFFNESS TEST STAND FOR BODY IN WHITE

It is mainly used for body-in-white torsion rigidity tests, bending rigidity tests, dent resistance tests and body focus point static stiffness tests.

Test items

- Body-in-white torsion rigidity test
- Body-in-white bending rigidity test
- Body-in-white dent resistance test
- Static stiffness test of hinge points and other focus points



MEDIUM VEHICLE CHASSIS DYNAMOMETER



PEDESTRIAN PROTECTION IMPACT TEST STAND



VEHICLE AUXILIARY FRAME FATIGUE TEST BENCH

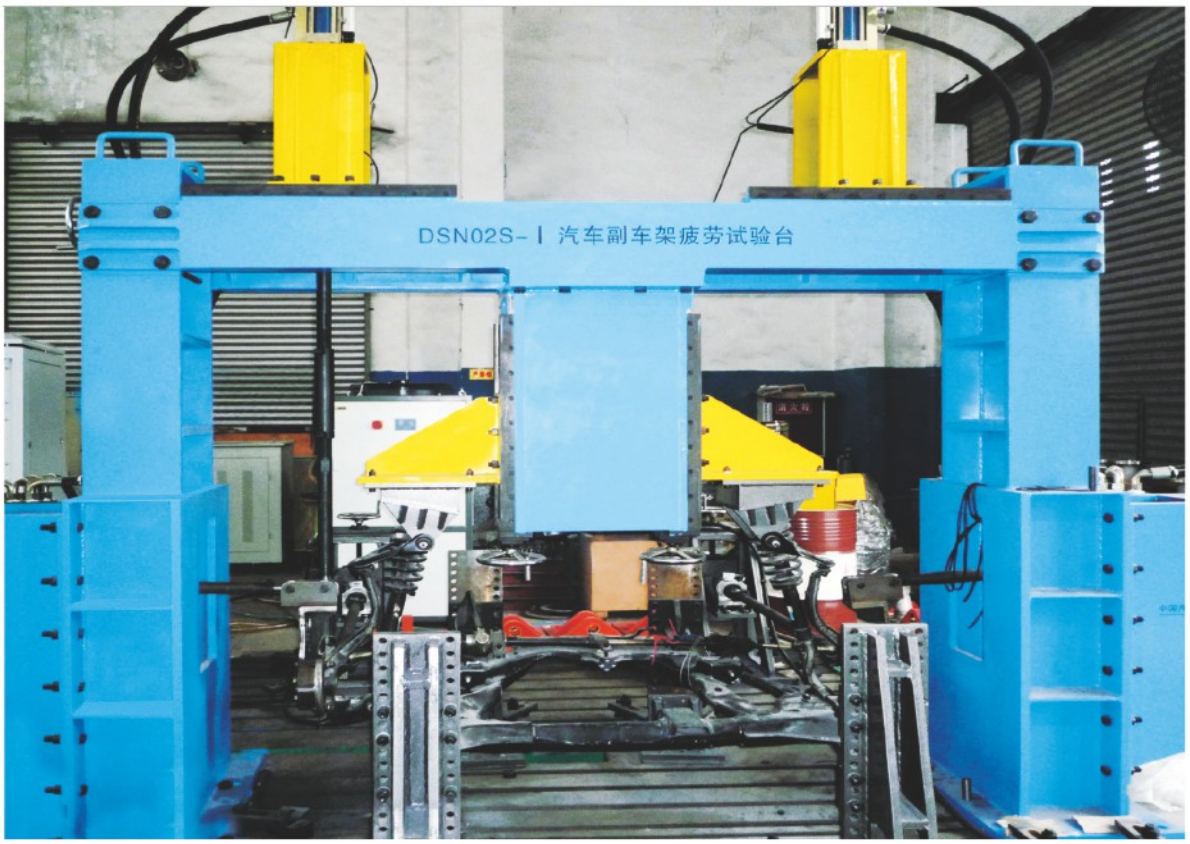

02 ENGINE AND POWERTRAIN

ENGINE TEST SYSTEM

It is mainly used to test the power, torque, efficiency, fuel consumption, emissions and other performance parameters of the engine; evaluate the power performance, economy, reliability and emissions of the engine according to relevant standard test methods, and provide detailed data support for the research and development, optimization, selection, diagnosis, product acceptance and assemble matching of the engine.

Technical Parameters

Test power : 0~450KW
Test speed : 0~7000rpm
Test torque : 0~3000NM



Test items

GB 18297-2001 Performance test of engines
GBT 19055-2003 Reliability test of engines
GB 17691-2005 Emission test of engines

COMPREHENSIVE TEST STAND OF POWERTRAIN

It is mainly used for performance and fatigue tests of various types of automotive powertrain, but can also be used for performances tests of engines.

Test items

- Real vehicle simulation matching test of powertrain
- Powertrain durability test
- Engine performance test

1. Engine coolant constant temperature system
- Independent design; can be flexibly applied to different tests
- PLC control, with high reliability
- can meet the requirements of various thermal shock test specifications

2.Intelligent fuel consumption meter
- High-precision continuous measurement
- high reliability, good repeatability
- Wide measuring range
- with automatic degassing function

3. Engine oil thermostat system
- High-precision oil temperature control
- Compatible with a variety of oil extraction methods
- Easy operation



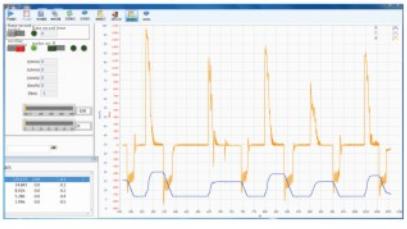

03 TRANSMISSION SYSTEM

TRANSMISSION SYSTEM TEST STAND

It is mainly used for endurance tests and transmission efficiency tests for the middle axle, rear axle and gearbox of vehicles with different wheel tread. It is driven and loaded by an AC variable frequency motor, and has the energy feedback function. The electric energy generated by the loading motor can be provided to the drive motor via the frequency conversion control system drive the motor, and the energy saving efficiency can reach above 70%. Each motor can work either in speed mode or in torque mode. Different control modes can be switched freely, and the response time is less than 100ms.

Test items

- Transmission system gear fatigue test
- Transmission system transmission efficiency test
- Differential assembly fatigue test
- Differential impact rigidity, temperature rise test, etc



Technical Parameters

- Maximum drive power : 150kw~900kw
- Two / four loading heads

CLUTCH SERIES TEST STAND

It adopts advanced technologies such as AC motor driving, Ac motor simulating road resistance moment, and motor simulating inertia. It is mainly used for performance and durability tests for dry friction clutch assembly, and provide important basis for the production, testing and development of clutch assembly. For different dry friction clutch assembly, it only needs to replace the engine flywheel and connecting shaft. It is easy to operate and maintain.



Clutch dynamometer test stand

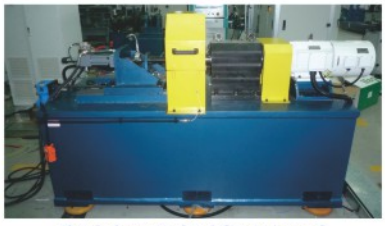

Clutch dynamic durability test stand



Cover assembly burst test stand



AT piston performance test stand



Clutch disc torsional durability test stand



Clutch cover comprehensive performance test stand

SYNCHRONIZER TEST STAND (LIGHT、HEAVY)

Heavy-duty vehicle synchronizer test stand



■ Test items

- ○ Transmission Synchronizer Performance Test
- ○ Transmission Synchronizer Life Test

■ Light-duty vehicle synchronizer test stand

It is mainly used for gear shifting performance or gear shifting durability tests of dry and wet double clutch transmission and manual transmission. The test bench can adjust the input speed and output speed of the transmission, and can shift gears with the automatic gear shifting actuator. It can also perform reverse-gear synchronizer tests. The transmission can be cooled with air cooling or oil circulation cooling.



AUTOMATIC TRANSMISSION SERIES TEST STAND

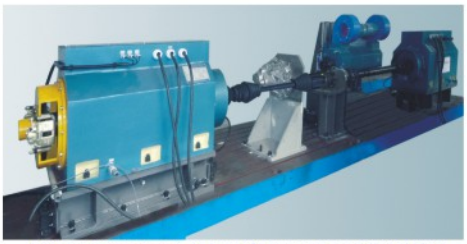

Automatic transmission performance and durability test stand

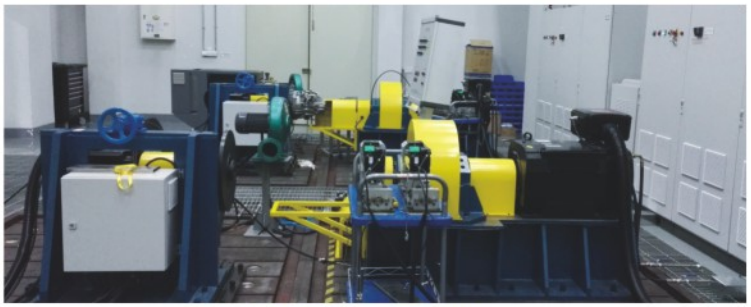

DCT synchronizer test stand



Transmission oil pump test stand



Hydraulic module assembly test stand



Gearbox lubrication and gear shifting test stand

Mechanical Transmission Test Stand (Light、Heavy)

It is mainly used for performance tests and fatigue life tests of mechanical transmission.

- Electric closed mode, DC, AC, water cooling and air cooling available
- Power, torque and speed can be customized according to customer’ s needs.
- air-cooling, water-cooling and external circulation are available for test-piece oil temperature control.
- Automatic gear shifting, custom test process
- Early fault diagnosis of specimens (imported version available)



Transmission fatigue life test stand



Front and rear drive transmission fatigue life test



Passenger car transmission performance and durability testing system



Heavy duty vehicle transmission durability test stand

DRIVING AXLE TEST STAND (LIGHT、HEAVY)



Three motor test stand



Medium and heavy duty driving axle test stand (electric closed)



Electric forklift driving axle test stand



Light duty driving axle test stand



Driving axle test stand

MECHANICAL CLOSE TYPE TEST STAND (TRANSMISSION SHAFT 、 DRIVE SHAFT)

It is mainly driven by the AC variable frequency motor and loaded by the hydraulic loader. For test products of different models, it only needs to replace the connecting flange. The test stand can test four drive shafts simultaneously.

Test items

- Life test of constant velocity universal joint and its assembly
- Wear test cross-type universal joint
- Spline wear test

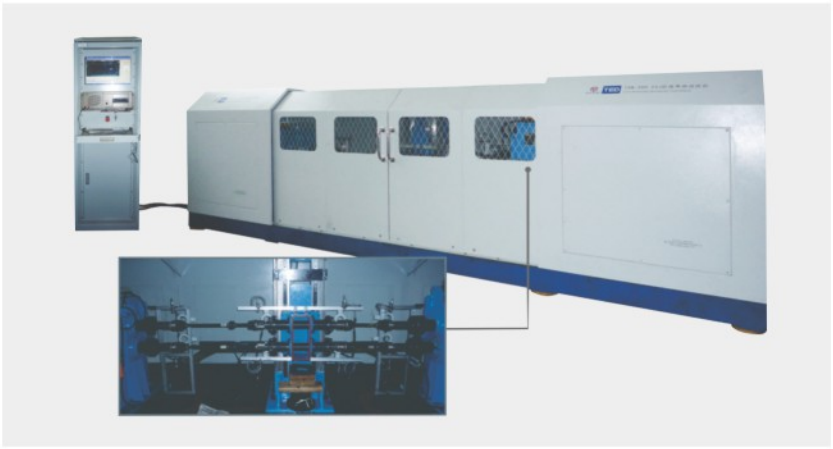



Drive shaft fatigue life test stand



BENDING DURABILITY TEST STAND OF AXLE SHELL (LIGHT、HEAVY)



Light-duty vehicle axle shell bending fatigue test stand



Axle shell vertical bending rigidity, static strength and fatigue test stand

STATIC TORQUE TEST STAND

It is mainly used for static torsion strength tests and stiffness tests for transmission parts and axle and shaft parts. It can automatically record the relationship curve between the output torque and rotation angle, and calculate the stiffness coefficient and strength reserve coefficient of specimens.

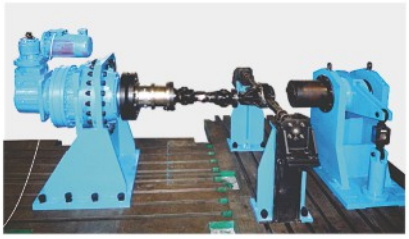

Technical Parameters

Output torque range : 0 ~ 150000Nm
Output speed range : 0.01 ~ 0.25rpm
Rotation angle test accuracy : 0.01°

TORSIONAL DURABILITY TEST STAND

It is mainly used for durability tests for torsion parts & components, with a loading frequency less than 20Hz. The test stand can mainly perform fatigue tests for transmission shaft, driver shaft, clutch disk,dual mass flywheel,gearbox shell and torque converter.



Technical Parameters

Driving torque : 0~10000N.m
Dynamic loading frequency : 0 ~ 20Hz

HIGH-LOW TEMPERATURE DURABILITY TEST STAND OF CONSTANTVELOCITY UNIVERSAL JOINT RUBBER COVER

It is mainly used for durability tests for constant velocity universal joint, and can perform high-low temperature durability test, cold start test and rotary expansion test of constant velocity universal joint according to JB / T10189-2000 " Constant velocity universal joints and assemblies for automobiles " and relevant enterprise standards.



Test items

- High temperature durability test
- Low temperature durability test
- Cold start test
- Rotary expansion test

04 STEERING & SUSPENSION SYSTEM

3 AXLE TEST STAND OF STEERING SYSTEM

It is the special test equipment for the following test items of the mechanical steering system, HPS hydraulic power steering system and EPS electric power steering system.

Basis

- QC/T 649-2000 Motor vehicles-Steering control mechanism-Performance requirements and test methods
- QC/T 29097—2010 Technical specifications of automobile steering gear
- QC/T 29096—2010Bench test methods of automobile steering gear
- Party A' s technical requirements

Test items

- Forward drive durability test (room temperature, high temperature, low temperature)
- Reverse fatigue test (room temperature, high temperature, low temperature)
- Tension/compression test
- Thermal cycling test
- Low temperature resistance test
- Bottom-touching test



COMPREHENSIVE TEST STAND OF STEERING SYSTEM

It is mainly used for performance and reliability tests for rack and pinion mechanical steering gear, power steering and electric steering gear assembly and steering column, and is the special equipment for steering system matching tests.

Technical Parameters

Maximum input torque : 100Nm
Loading torque : ±2000Nm/±3000Nm
Output loading force : 10KN
High-low temperature test chamber : -40~150℃



C-EPS and mechanical steering gear fatigue life test stand

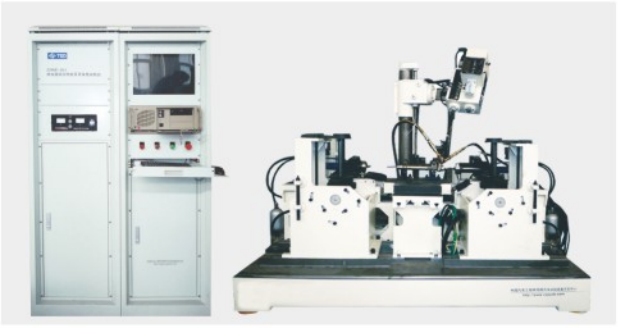

Steering gear (mechanical, hydraulic power, electric power) comprehensive performance and reliability test stand

5 AXIS STEERING TEST BED



SUSPENSION SYSTEM TEST



SUSPENSION SYSTEM TEST BED



SUSPENSION K&C PERFORMANCE TEST BED

STEERING TRANSMISSION SYSTEM TEST-BED SERIES



Steering transmission shaft durability test stand



EPS comprehensive performance and durability test stand



Steering transmission shaft bending performance and fatigue test stamd



Column Electric Power Steering assembly online test stand



Steering transmission system fatigue wear test stand



Universal joint performance test stand

EPS TEST STAND SERIES



P-EPS assembly performance test stand



EPS controller high temperature performance test stand



EPS assembly factory test stand



Torque Transducer Performance Test Stand



EPS Torque Transducer Transmission Circuit Board Online

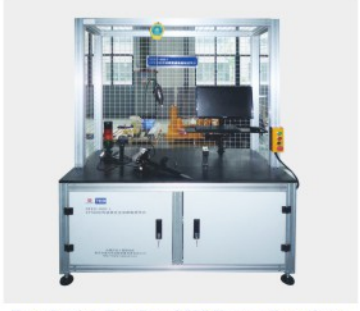

Zero Setting Test Stand EPS Torque Transducer Transmission Circuit Board Zero Setting Table

SERIES TEST STAND OF RACK AND PINION GEAR STEERING SYSTEM



Rack and pinion (mechanical power) steering gear performance test stand



Rack and pinion steering gear fatigue life test stand



Rack steering gear assembly online integrated test stand



Electric power steering gear comprehensive performance test bed



Torsional performance and fatigue test stand

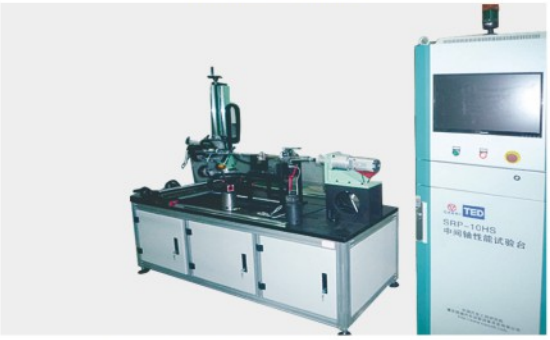

Intermediate shaft performance test stand



Steering knuckle hydrostatic test stand



Steering knuckle impact and durability test bench

SERIES TEST STAND OF RECIRCULATING BALL STEERING GEAR



Recirculating ball steering gear performance test stand



Recirculating ball steering gear durability test stand



Recirculating ball power steering gear comprehensive performance test stand

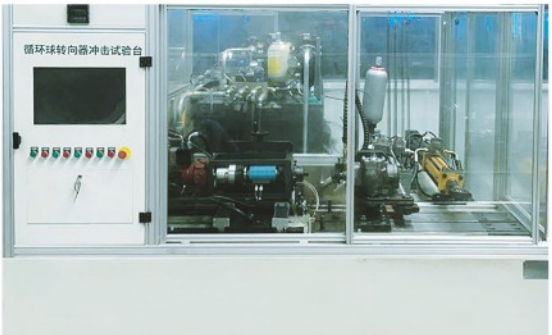

Recirculating ball steering gear impact test stand



Recirculating ball EPS power steering gear performance test stand



Recirculating ball power steering gear online test stand



Recirculating ball steering gear life test stand



Recirculating ball power steering gear valve assembly test stand

AUTOMOBILE BALL JOINT TEST STAND SERIES



Automobile ball joint assembly performance test stand



Heavy-duty vehicle ball joint assembly durability test stand



Light-duty vehicle ball joint assembly durability test stand



Environmental durability tester

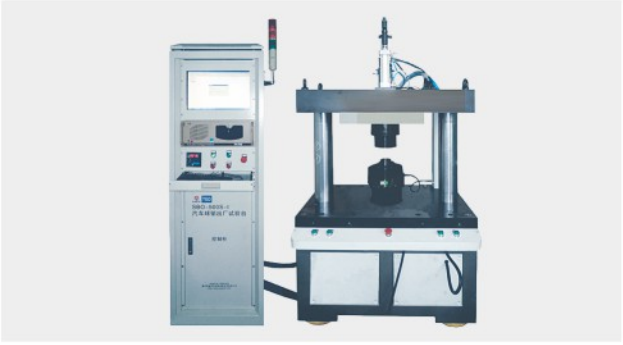

Automobile ball joint production line squeeze riveter



Ball joint high-low temperature environmental durability test stand



Automotive rubber parts high- low temperature durability test stand



Rubber parts durability test stand

STEERING PUMP TEST STAND SERIES



Automotive power steering oil pump performance test stand



Power steering oil pump comprehensive performance and durability test stand



Steering oil pump on-line performance test stand



Automotive power steering oil pump noise test stand



Automotive power steering oil pump high and low temperature reliability test stand



Eelectric steering oil pump test stand



Four-station transmission oil pump test stand



Automatic transmission oil pump durability test stand

05 BRAKING SYSTEM

TORSION FATIGUE TEST STAND OF BRAKING SYSTEM (LIGHT)

It is special test equipment for comprehensive performance tests for the hydraulic braking system of vehicles weighing below 3t. The entire braking system (from the actual vehicle pedal to the brake) can be arranged on the stand according to the vehicle assembly state, and can be connected with the actual vehicle lines, so that the performance of the whole vehicle braking system under the actual vehicle state can be evaluated. It is also possible to independently test the braking performance of a certain brake.

Main technical parameters

- Drive motor: power 361kW,rated speed 540r/min
- Inertia simulation range : 50~800kg.m2
- Inertia adjustment method: mechanical inertia + electric inertia
- Number of braking wheels tested simultaneously: 4 (or a single wheel)
- Brake pressure (hydraulic): 0 ~ 20Mpa, adjustable
- Single wheel braking torque range : 0 ~ 5000Nm
- Maximum driving force of pedal : 1000N
- Cooling and exhaust speed : 0 ~ 20m/s , adjustable
- Single-wheel load-bearing simulation range : 0 ~ 1t
- Drum diameter : 48 inches (1219.2mm)





Test items

- Brake efficiency test (single wheel)
- Brake thermal recession recovery test (single wheel)
- Brake lining / pad wear test (single wheel)
- Brake noise measurement (single wheel)
- ABS performance test (braking tests on roads with different adhesion coefficient)
- Whole vehicle braking efficiency (no-load and full load test, response time, etc.)
- Braking force distribution curve of front and rear brakes
- Pedal force - brake hydraulic - brake torque curve
- Pedal displacement - brake hydraulic - brake torque curv

BRAKING SYSTEM TEST STAND (HEAVY)

It is mainly used for braking performance tests for the braking system from the braking pedal to the wheel of the vehicle. It can not only perform inertia tests of a single brake, but also simulate braking performance tests of the whole vehicle braking system. It can simulate braking effects on different roads, such as single road, bisectional road, and joint road; it can also simulate the braking effects of vehicles with different axle loads or in case of axle load transfer during the braking process.

Test items

- Brake efficiency test
- Brake thermal recession recovery test
- Brake lining / pad wear test
- Brake noise measurement
- ABS performance test
- Braking force distribution test
- Braking test on roads with different adhesion coefficient
- Response characteristic test of braking system



BRAKING SYSTEM TEST STAND (AVIATION)

It is mainly used for braking performance tests for the braking system from the braking pedal to the wheel of the vehicle. It can not only perform inertia tests of a single brake, but also simulate braking performance tests of the whole vehicle braking system. It can simulate braking effects on different roads, such as single road, bisectional road, and joint road; it can also simulate the braking effects of vehicles with different axle loads or in case of axle load transfer during the braking process.

Test items

- Brake efficiency test
- Brake thermal recession recovery test
- Brake lining / pad wear test
- Brake noise measurement
- ABS performance test
- Braking force distribution test
- Braking test on roads with different adhesion coefficient
- Response characteristic test of braking system



INERTIA SIMULATION TEST STAND OF BRAKING SYSTEM (LIGHT、HEAVY、ENGINEERING MACHINERY、AVIATION)

It is mainly used for brake inertia tests for various cars, light vehicles, medium and heavy duty vehicles, forklifts, engineering machinery and aviation. Adopting the control method of electric inertia simulation, it can realize stepless and precise adjustment of test inertia. Using a special closed-loop controller, it can realize the control of constant tube pressure, constant torque and constant deceleration. It has a comprehensive video monitoring function. It uses upper and lower computer control mode and industrial Ethernet communications to ensure reliability and real-time.

Test items

- Brake efficiency test
- Brake thermal recession recovery test
- Brake lining / pad wear test
- Trailing test



Saloon car brake electrical inertial simulation test stand



Medium and heavy-duty vehicle brake electrical inertial simulation test stand

TORSION FATIGUE TEST STAND OF BRAKING SYSTEM (LIGHT、HEAVY)

It is mainly used for torsion fatigue tests for various automotive brakes, and is a special device automatically controlled by computer. It can conduct durability tests on specimens according to applicable national standards and enterprise standards, and is featured by being efficient, precise and reliable.



Light –duty vehicle brake torsion fatigue test stand



Medium and heavy-duty brake assembly torsion fatigue test stand

PERFORMANCE TEST STAND OF PNEUMATIC BRAKING VALVE

It is a testing device for high and low temperature and room temperature comprehensive performance tests for automotive pneumatic brake master valve, relay valve, hand valve, trailer valve, four circuit protection valve, dryer / unloading valve, load sensing valve, ABS control valve, altitude valve , overflow valve, pressure limiting valve in accordance with the relevant national auto industry standards, mainly for. It can perform tests of sealing, static characteristics and dynamic properties.



DURABILITY TEST STAND OF PNEUMATIC BRAKING VALVE

It is mainly used for room temperature, high temperature and low temperature durability tests for valves in the pneumatic braking system of automobiles and trailers (including: pneumatic braking valve, foot braking valve, hand control braking valve, loading sensing proportional valve, spring braking chamber, pressure regulating valve, unloading valve, pressure protection valve, relay valve, differential valve, trailer braking valve and other products). For the same product, three specimens can be tested for durability simultaneously.



INTEGRAL PERFORMANCE TEST STAND OF BRAKING CLAMP ASSEMBLY (HYDRAULICS 、 PNEUMATIC)

It is a testing device mainly for high-precision performance tests of disk brakes at room temperature.

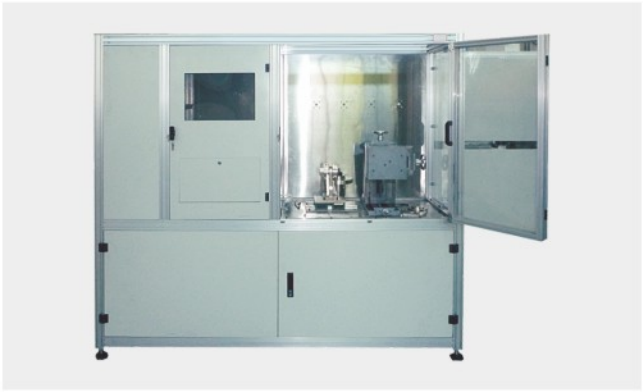



DURABILITY TEST STAND OF HYDRAULIC BRAKING COMPONENT

It is a special testing device for durability tests for parts such as automotive vacuum booster, brake master cylinder, wheel cylinder, braking clamp, and proportional valve, and is featured by reasonable structure, easy operation, and stable and reliable system. The system consists of the mechanical stand, driving device, loading device, measurement and control and computer monitoring components.



PERFORMANCE TEST STAND OF VACUUM BOOSTER AND MASTER CYLINDER

It is a special testing device for testing comprehensive performance of brake master cylinder assembly, vacuum booster assembly, brake master cylinder with vacuum booster assembly. The device has two functions of automatic testing and manual testing. This device can be provided with a specially customized high and low temperature test chamber, so that it can not only conduct general performance tests on above three products can, but also can do various performance tests at high and low temperature.



06 NEW ENERGY

DRIVE MOTOR TESTING SYSTEM

Specimen range

Drive motor for terrain vehicles, drive motor for saloon cars, drive motor for passenger cars, and drive motor for buses.

Test items

- No-load test
- locked-rotor test
- Load temperature rise test
- Load efficiency test

Composition of the testing system



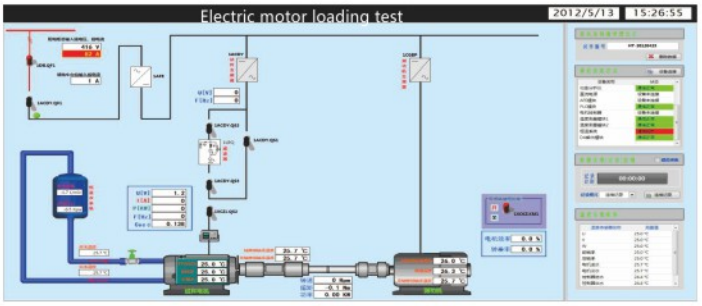

POWER BATTERY TESTING SYSTEM



When the system is working in Slave mode, the system is equivalent to a power battery

- It can provide a constant voltage source to the controller when the motor controller is working in motoring state;
- It converts energy and returns it to the DC bus or the grid when the motor controller is working in power generation state.
- It can run according to the battery resistance curve set by the user, sand simulate the battery output characteristics of electric vehicles under different working conditions.

When the system is working in Master Mode, the system can be equivalent to a power battery tester

- Performance test, testing various performance parameters of the battery in charging and discharging
- Cycle endurance test, verifying the limit cycle times of the battery;
- Simulated working condition test, simulating and testing the actual working condition of the battery when the electrical vehicle is running

POWERTRAIN TESTING SYSTEM FOR NEW ENERGY AUTOMOBILE



Light-duty EV powertrain test stand



Heavy-duty EV powertrain test stand

Specimen range

AC asynchronous automotive motor and controller assembly, AC permanent magnet automotive motor and controller assembly, hybrid motor with controller and engine assembly, hybrid power train with gearbox assembly.






Test items

- Internal combustion engine test
- Hybrid power train test
- Power train durability test
- Gearbox test
- Drive motor and controller test

Composition of the testing system

The powertrain testing system can combine with the measuring and controlling system via mechanical installation, and can independently test specimens including gearbox, motor with controller and internal combustion engine.

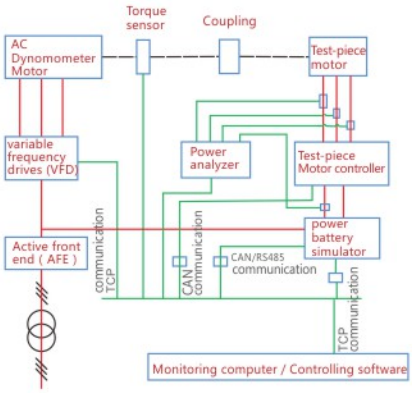

Schematic of pure electric power train testing system

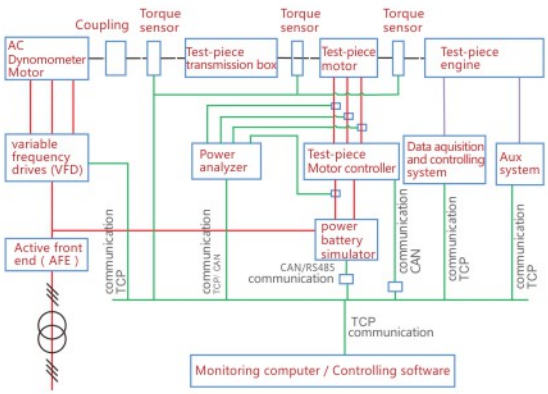

Schematic of hybrid power train testing system

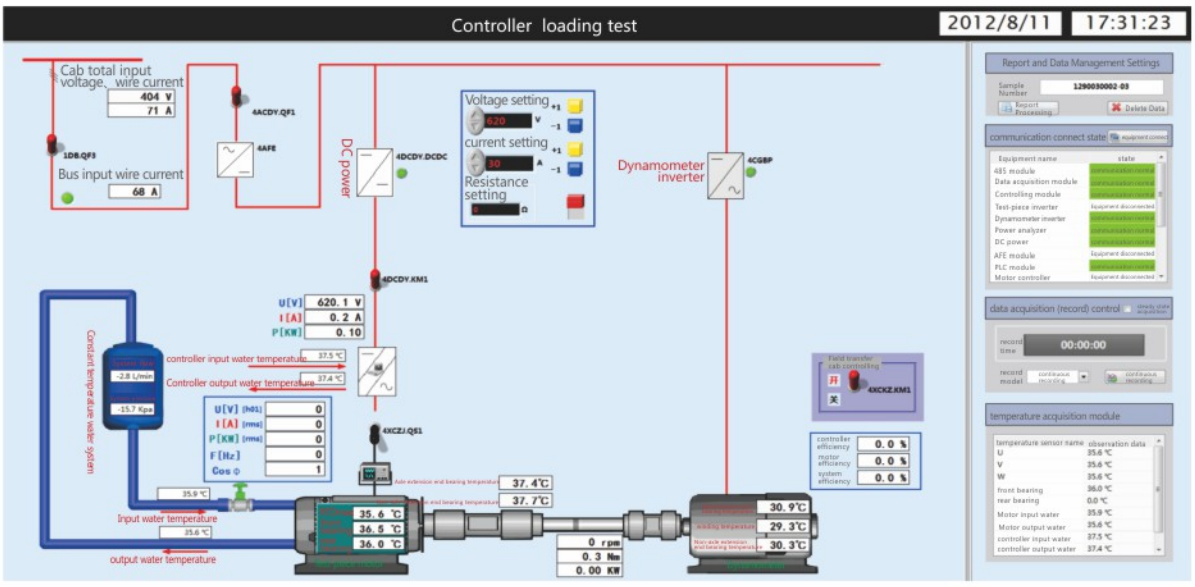

Efficiency MAP diagram of specimens in motoring and power generation states

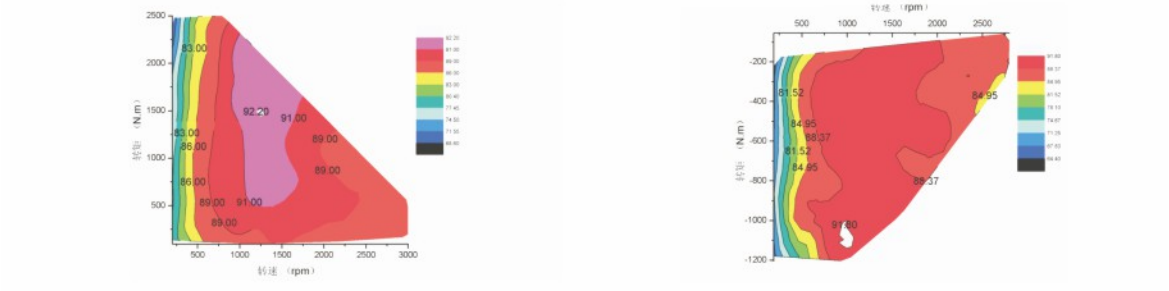

OPTIONAL ACCESSORIES

■ AC motor test power supply source

■ Analog power supply source of power battery

■ Stand for loading dynamometer

(1) Uses and features:

- Dedicated custom dynamometer motor, featured by good performance, easy maintenance and long service life
- High-speed dynamic dynamometer motor, meeting a variety of high-speed test requirements
- Common DC bus design, feeding back internal energy cycle
- Equipped with high-precision, high-response torque and speed sensors, ensuring the dynamics and accuracy of the closed-loop torque and speed control.

(2) Parameters and description of dynamometer motor and drive

Dynamometer motor power: 30KW~400KW
Dynamometer motor rated speed: 0~15000r/min

■ Power analyzer system



- Optional high-quality brand sensors and analyzers, featured by high precision, wide bandwidth, accurate and stable data measurement
- It can measure 3-phase voltage, 3-phase current, frequency, DC voltage and current, power, power factor and efficiency, with the functions of harmonic analysis and saving waveform data.
- Interface: Ethernet

■ Coolant temperature control device

- local or remote communication control
- Automatic control and manual control can be switched for flow and temperature.
- Wide flow adjustment range, and high-precision flow control
- The built-in cooling and heating device can adjust the coolant temperature in a wide range .

Throttle actuator

- High positioning accuracy and fast response
- Linear force output
- large pulling force and good stability
- The stroke can be arbitrarily set

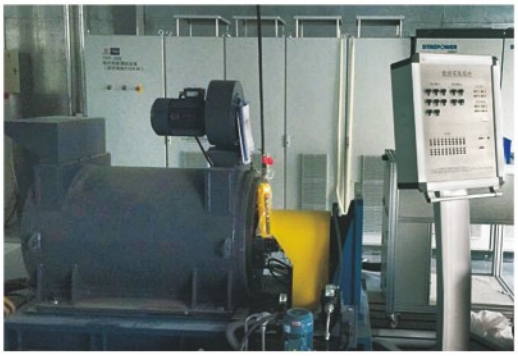



Transmission servo gear shifting and clutch actuator

- Consisting of 2 linear drive mechanisms, XY actuator and control system
- Can achieve multi-gear shifting and automatic transmission gear selection
- Can measure shifting force and displacement
- outputs via the flexible shaft or the guide bar
- has an independent controller, and can be used independently
- Has a separate data acquisition module that can capture signals such as tension and pressure, displacement and switching value.
- Communicates with the external control system through Ethernet, and has the self-learning function.





TURN-KEY PROJECT CASES

In recent years, the new energy automotive industry has been booming. For the testing needs in the field of new energy technologies, we have developed testing systems for automotive motors, motor controllers, power batteries, EV gearboxes; as well as testing systems for pure electric powertrain and hybrid powertrain, covering performance and durability tests for parts and powertrain of new energy vehicles (terrain vehicles, saloon cars, passenger cars, buses)






07 INTELLIGENT CONNECTED VEHICLE TEST SYSTEM

INTELLIGENT CONNECTED VEHICLE TESTING EQUIPMENT

Intelligent made cars, namely ICV (full name Intelligent Connected Vehicle), refers to the internet and Intelligent Vehicle organically combined, which is carrying the advanced Vehicle sensor, controller, actuator and other devices, and the integration of modern communication and network technology, to carry out the vehicles and pedestrians, vehicles, roads, the background Intelligent information exchange and sharing, to achieve safety, comfortable, energy saving, high efficiency, and ultimately can replace of driver to operate the new generation cars.
According to the control of autonomous driving robot, high-precision and ultra-low chassis target carrying platform, and artificial vehicle, which can reproduce the scene and identify the active safety performances of vehicle.
The equipment will integrate Euro-NCAP, IIHS, CNCAP, index and other test procedures to localization for domestic users.

- Automatic pilot robot at test site
- Super flat load robot car
- Pedestrian and vehicle simulation targets



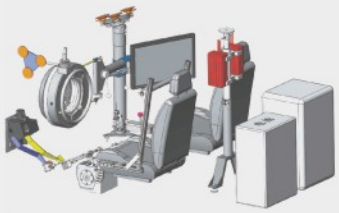

Pilot robot for ADAS test

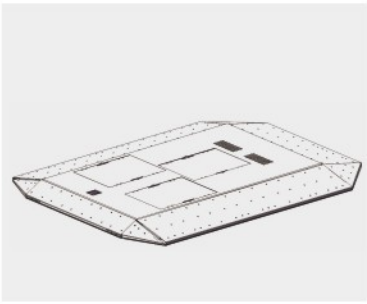

Super flat carrying robot

PHYSICAL AND VIRTUAL SIMULATION TESTING EQUIPMENT FOR AUTOMOTIVE ELECTRONIC CONTROL COMPONENTS

- Vehicle controller (VCU) hardware simulation test system
- Power battery BMS hardware simulation test system
- Transmission control unit (TCU) hardware simulation test system



Battery pack capacity tester

08 OTHERS

MULTICHANNEL ELECTRO-HYDRAULIC SERVO FATIGUE TESTING STAND

Features:

- It is used for fatigue tests and rigidity tests for front and rear sub-frames of vehicles.
- It can be expanded to conduct fatigue and rigidity tests for structural parts.
- It can simulate real vehicle installation, so that the test is more in line with actual conditions.
- It has a hydraulic servo loading system to simulate actual vehicle load, and uses high-performance servo controller.
- It can use closed-loop control and open-loop control to meet different test requirements.





Test items :

- Fatigue test of front and rear subframes
- Static stiffness test of front and rear subframes
- Fatigue and static stiffness test of structural parts.

SAFETY BELT SERIESTEST STANDS

- Safety belt fixing point strength test stand
- Retractor durability test stand
- Buckle insertion force and opening force test stand
- Retractor dust resistance test stand
- Retractor emergency locking performance test stand
- Wear and micro-slip test stand
- Buckle durability test stand
- Anti-foam test

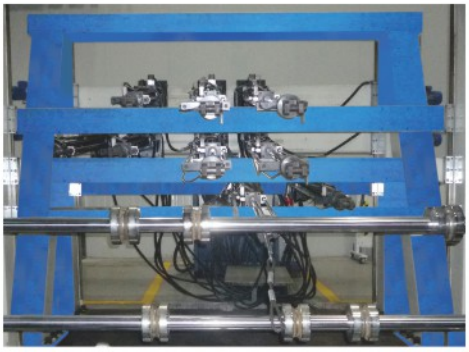

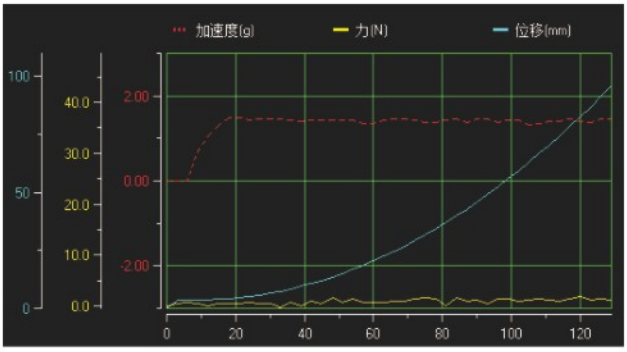

PERFORMANCE AND DURABILITY TEST STAND OF SHOCK ABSORBER

It is a special testing device for performance and durability tests for automotive shock absorbers, and can test the tension and compression force,maximum linear speed at the upper and lower end, vibrating frequency at the upper and lower end, cylinder temperature, lateral force, ambient temperature and other parameters of the shock absorber. It can also perform reliability tests for shock absorbers.



Test items :

- Power indication test
- Inflation test
- Friction test
- Speed characteristic test
- Anti-foam test
- Temperature characteristic test
- Shock absorber durability test

SEAT AND HEAD RESTRAINTS TEST STAND SERIES

It is mainly used for performance tests of automobile head restraints; strength tests of seat backs and their regulating devices; strength tests for seat fixing devices, adjusting devices, locking devices and displacement folding devices (static); energy absorption tests for seat backs and head restraints; and static strength tests for passenger car’ s seats. Up to 3 single-seated seats can be loaded at the same time. Loading is done electrically and impact tests are done pneumatically. The tests will be carried out strictly in accordance with ECE-R17 and applicable national standards.





Test items

- Number of stations that can be loaded at the same time: 1-3 stations
- Headrest performance test
- Performance tests of head restraints
- Energy absorption test for seat backs and head restraints
- Strength tests of seat backs and their regulating devices
- Strength tests for seat fixing devices, adjusting devices, locking devices and displacement folding devices (static)
- Static strength test of passenger car’ s seats

CHILD SEAT TEST STAND SERIES

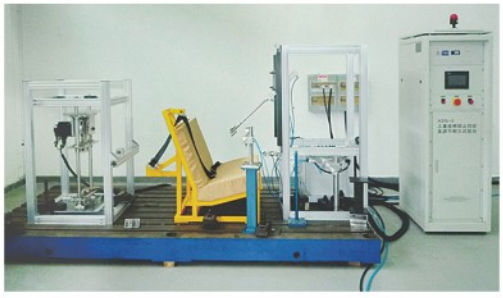

Child seat locking performance and adjustment test stand



Connector opening/closing durability test stand



Child seat rollover test stand

TIRE TEST STAND SERIES



Tire radial fatigue test stand



Wheel bending fatigue test stand Tire impact test stand

AUTOMOBILE PEDAL/HAND BRAKE CONTROL TEST STAND

It is mainly used for performance and durability tests for automotive mechanically articulated metal pedals.

Test items

- Brake pedal durability test
- Accelerator pedal durability test
- Clutch pedal durability test
- Pedal performance test



COMPREHENSIVE PERFORMANCE TEST STAND OF ENGINE WATER PUMP

It is a special testing device for cooling water pumps of automotive engines, and can conduct performance, cavitation and reliability tests on water pumps.

Test items

- Water pump performance test
- Water pump cavitation test
- Water pump reliability test



COMPREHENSIVE PERFORMANCE TEST STAND OF SHIFTING SYSTEM AND CABLE ASSEMBLY

It is a special testing device for performance tests and durability tests of automobile shifting systems and cable assemblies.

Test items-Shifting system

- Gear selection function
- Gear holding function
- Anti-maloperation function
- Unlocking triggering function of ignition switch key
- Gear shifting and selection interval
- No-load operating force (Class A)
- No-load operating force (Class B)
- Handle button operating force



Joystick stiffness

- Handle connection strength (pullout)
- Handle connection strength(torsion)
- Structural strength
- Impact strength
- Joystick strength
- Handle button durability
- Durability test



Cable assembly

- Load efficiency
- Stroke efficiency
- Slide resistance (Starting force)

PERFORMANCE AND RELIABILITY TEST STAND OF ENGINE LUBRICATION OIL PUMP

It is mainly used for performance and reliability tests for automobile engine lubrication oil pumps. It has three durability test stations (one of which can be used for performance tests); as well as three loading systems to support three engine lubrication oil pumps to be tested together or separately. In performance tests, it is automatically loaded with a proportional valve. In life tests, it is loaded with a manual pressure regulating valve, and the load is switched with a solenoid valve. Oil temperature is automatically controlled.

Test items

- Starting oil-out time
- Oil supply (including under rated operating conditions and under minimum stable speed conditions)
- Sealing
- Opening pressure of pressure- limiting valve
- Speed characteristics
- Pressure characteristics
- Operating characteristics of pressure- limiting valve
- Viscosity characteristics
- Reliability test





CORPORATE VALUES

- Serving customers / Helps employees / Create innovative enterprises

PRODUCT DEVELOPMENT PROCESS

- Procedure for making non-standard equipment

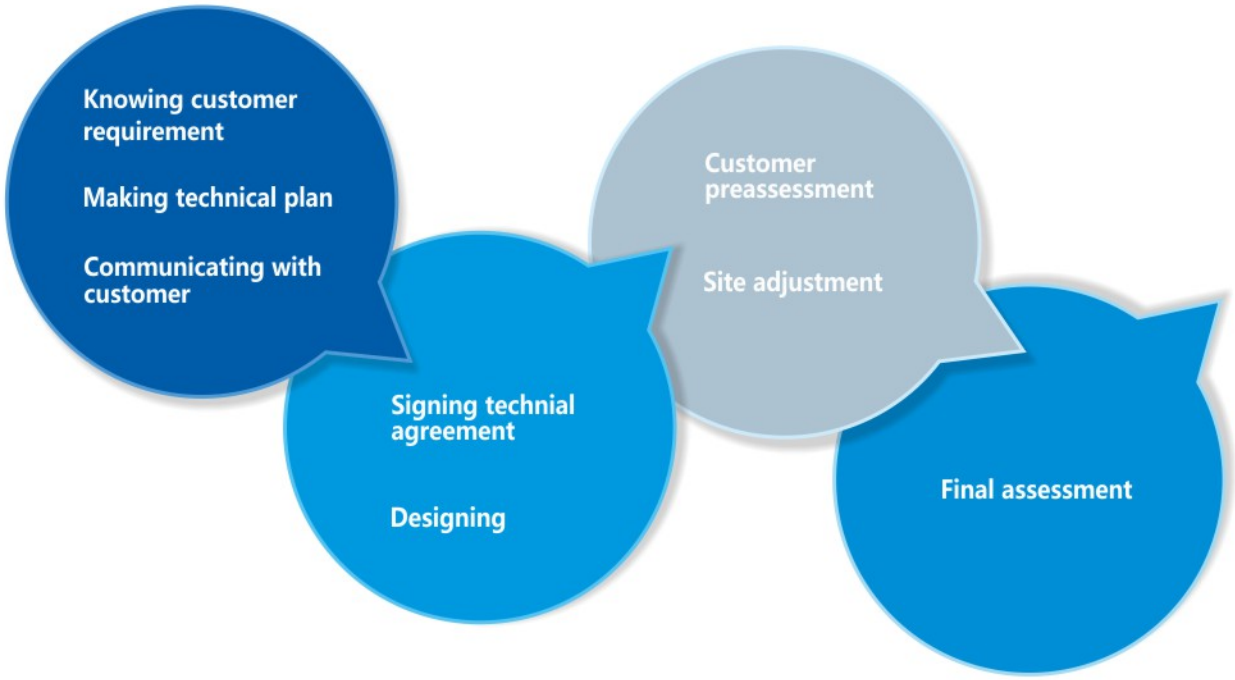

MORE PROFESSIONAL,MORE PERFECT AND MORE SUITABLE SYSTEM SOLUTIONS

———**Help you quickly find the products you need**

China Automotive Engineering Research Institute
Chongqing CAERI Automobile Test Equipment Development Co., Ltd

Add : No.9, Jinyu Ave, New North Zone, Chongqing ,P.R. China
Postal Code : 401122 **TEL :** 023-68826374
E-MAIL : ted@caeri.com.cn **Fax :** 023-68828953
Web : http://www.cqsysb.com

EXPORTING OFFICE :
HANGZHOU JOYOUNG TRADE CO.,LTD
ADD : Rooms 609, Bld.1 Xiaochengtiandi, Jinsha Avenue, Economic and Technological Development Zone, Hangzhou, Zhejiang, 310018, China
TEL : 0086-571-28935518 **FAX :** 0086-571-2885 2598
E-MAIL : info@ui-joyoung.com